SPECTRUM CONTROL INC.

Spec Mini-Press 9900 Series

This new knurled filter is designed to be pressed into place and create a reliable mechanical bond. This feature makes it an excellent selection for applications where soldering is undesirable. Suitable plating is available that allows gold bonding to the terminals.

Applications

These filters are ideal for microwave and RF applications such as attenuators, synthesizers, and oscillators. They perform well in high impedance circuits where large capacitance values are not practical.

Installation

- .136" to .137" (3.45-3.48mm) diameter hole
- Hole must be free of all insulating materials.
- Installation tool must have a hole of sufficient depth and diameter to accept the terminal of the filter.
- Installation force must be applied gradually and smoothly until the flange of the filter is seated against the receiving part (request installation instructions).

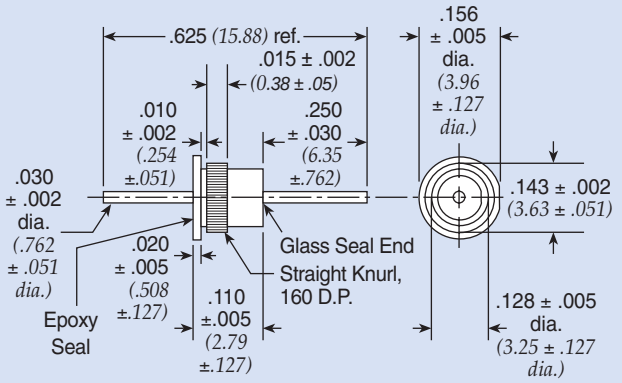

Built and tested in accordance with MIL-F-15733.

Figure 1

Dimensions in inches *(mm)*

Mechanical Specifications

Installation . . . . . Press-in

Plating . . . . . Gold

Seal . . . . . Glass sealed on one end, resin sealed on the other end

Termination Options . . . . . Plating suitable for gold bonding

Operating Temperature . . . . -55°C to +125°C

Circuit Schematic

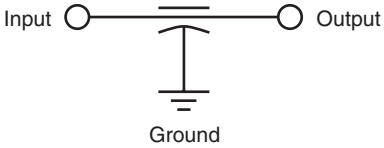

Insertion Tool

Part Number: SCI-9925-200

Part Number	Figure	Rated Voltage 125°C DC	I Amp	Cap	Minimum Insertion Loss (dB) 1 MHz	10 MHz	30 MHz	100 MHz	300 MHz	1 GHz	10 GHz
†SCI-9925-153	1	50	5	0.015 µF +100%/-0%	7	25	30	40	40	60	60
†SCI-9925-303	1	50	5	0.030 µF +100%/-0%	10	30	35	45	50	55	55
†SCI-9925-502	1	100	5	5000 pF +100%/-0%	—	15	20	30	35	45	55
†SCI-9925-000	1	200	5	10 pF max.	—	—	—	—	—	10	10
†SCI-9925-101	1	200	5	100 pF +100%/-0%	—	—	—	3	10	20	28
†SCI-9925-501	1	200	5	500 pF +100%/-0%	—	—	—	15	22	35	40
†SCI-9925-122	1	200	5	1200 pF +100%/-0%	—	5	10	20	28	35	45

† Also available through Spectrum Control's authorized distributors.