SPECTRUM CONTROL INC.

Thru-hole Filters

High Frequency PCB Filters

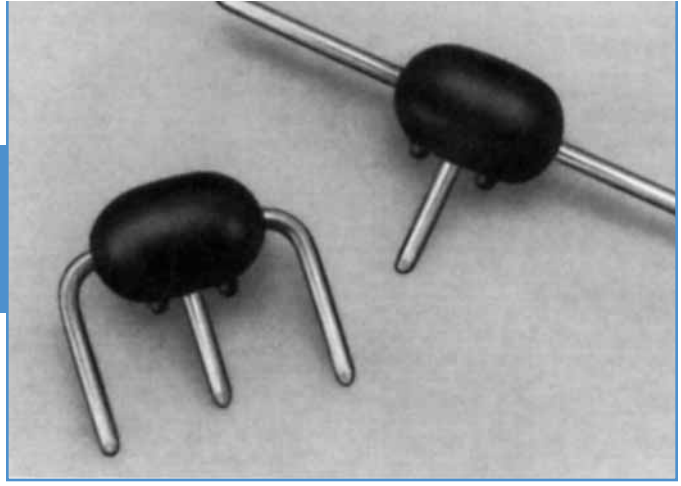

The economical High Frequency PCB Filter offers electrical characteristics which allow many devices to meet most government and industry specifications for EMI control, while providing good electrostatic discharge protection.

A lossy ferrite filter with a center ground lead is terminated within the filter's thermoset epoxy body.

The High Frequency PCB Filter offers savings three ways. First is the low cost of the filter assembly. Second is the economy of installation. Three silver plated leads are inserted into holes in a printed circuit board which has a ground path circuit, for conventional flows-soldering with other components. No special mounting plate or brackets are needed and when the holes are placed as recommended in a .062 (1.57mm) thick board, no lead trimming is required. Elimination of hand soldering provides opportunities for improved quality in addition to applied-cost benefits.

A third savings results from placing a filter at the source of an EMI problem, potentially eliminating the need for additional filtering at other points in the circuit.

Features

- Provides EMI filtering to protect low power digital circuits - helps equipment meet FCC and VDE specifications
- Mounts directly to printed circuit board with no bracket or plate for lower applied costs - can be flow soldered with other components
- Encapsulated for environmental protection
- Mounts on PCB to begin filtering at the source of the problem
- Built-in standoffs permit cleaning or coating under the filter

Circuit Schematic

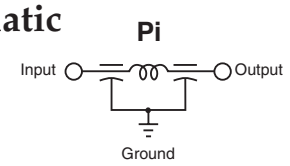

Typical Electrical Characteristics

Current . . . . . Max. 10A DC; 0.3A RF

Operating Voltage . . . . . Max. 50 VDC, -25°C +85°C

Capacitance . . . . . 800 pF min.

Dissipation Factor . . . . . 0.1 Max.

Dielectric Withstanding Voltage . . . . . 125 VDC for 5 seconds

Insulation Resistance . . . . . Min. 100 MegOhms at 100 VDC for 2 minutes and 25°C

Direct Current Resistance . . . . . 0.002 ohms Max.

Minimum No-Load Insertion Loss . . . . . Per MIL-STD-220 at 25°C; PCB mounted, 50 ohm strip line

3dB @ 8 MHz
10dB @ 25 MHz
15dB @ 50 MHZ
20dB @ 100 MHz-1GHz

Preformed to Recommended Mounting Configuration
Part Number 842448-2

Recommended Mounting Configuration

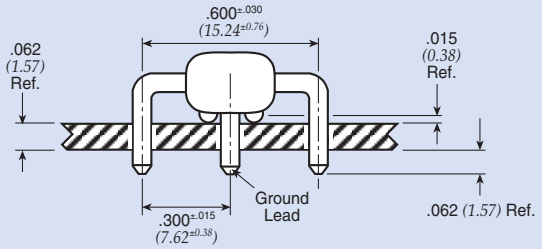

Dimensions in inches *(mm)*

Recommended PCB Hole Layout

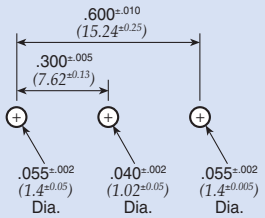

Dimensions in inches *(mm)*

Standard Configuration **Part Number 842448-1**

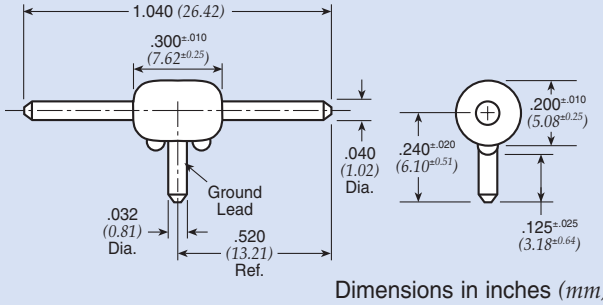

Dimensions in inches *(mm)*

Surface Mount Filters & Inductors

SPECTRUM CONTROL INC. • 8031 Avonia Rd. • Fairview, PA 16415 • Phone: 814-474-2207 • Fax: 814-474-2208 • Web site: www.spectrumcontrol.com
SPECTRUM CONTROL GmbH • Hansastrasse 6 • 91126 Schwabach, Germany • Phone: (49)-9122-795-0 • Fax: (49)-9122-795-58